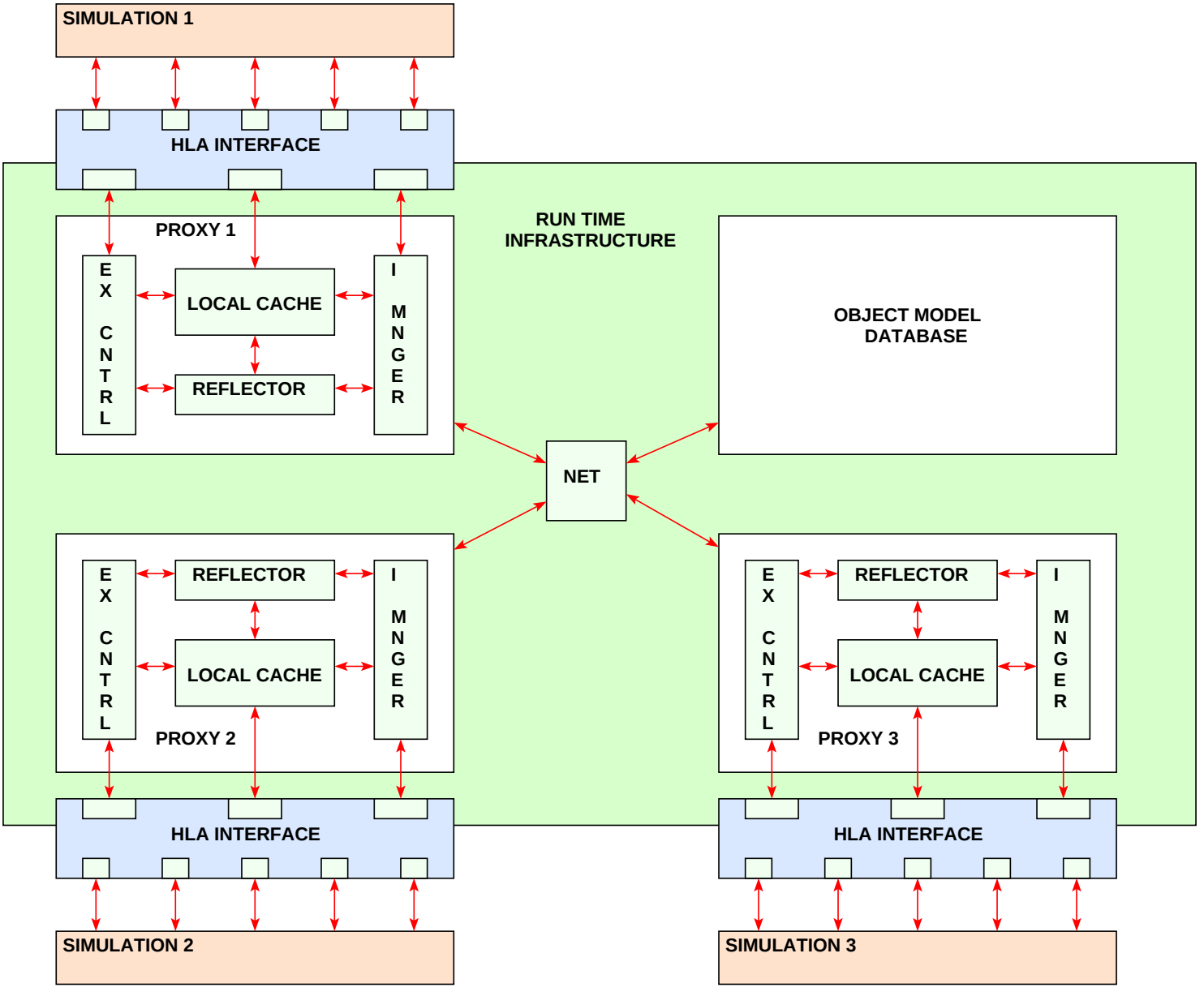
SIMULATION 1
HLA INTERFACE
RUN TIME
INFRASTRUCTURE
PROXY 1
EX CNTRL
LOCAL CACHE
REFLECTOR
IMNGER
OBJECT MODEL
DATABASE
NET
EX CNTRL
REFLECTOR
LOCAL CACHE
IMNGER
PROXY 2
EX CNTRL
REFLECTOR
LOCAL CACHE
IMNGER
PROXY 3
HLA INTERFACE
HLA INTERFACE
SIMULATION 2
SIMULATION 3